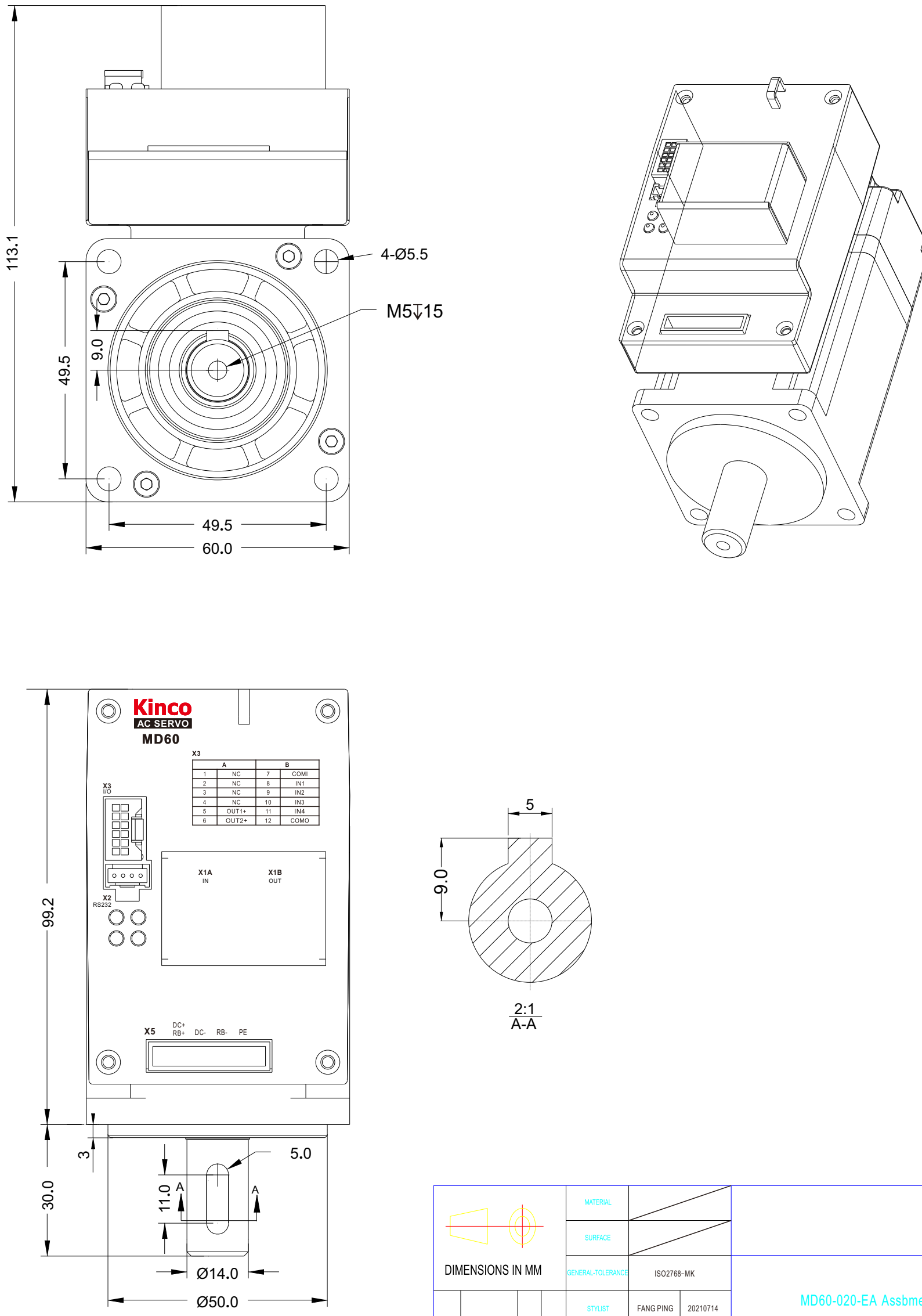


| A | | B | |
|---|---|---|---|
| 1 | NC | 7 | COMI |
| 2 | NC | 8 | IN1 |
| 3 | NC | 9 | IN2 |
| 4 | NC | 10 | IN3 |
| 5 | OUT1+ | 11 | IN4 |
| 6 | OUT2+ | 12 | COMO |

DIMENSIONS IN MM

| | | |
|---|---|---|
| MATERIAL | | |
| SURFACE | | |
| GENERAL-TOLERANCE | ISO2768-MK | |
| STYLIST | FANG PING | 20210714 |
| AUDITOR | | |
| APPROVER | | |

MD60-020-EA Assbmely

| VERSION | MARK | DATE | NAME | LINEAR | TECHNOLOGY | PARTNUMBER | SCALE | 1:1 | QUANTITY | WEIGHT |
|---|---|---|---|---|---|---|---|---|---|---|